SIN OF COLD®

# FT10.40L BLAST-CHILLER

## DESCRIPTIVE FEATURES

- INSULATION THICKNESS 70 mm
- 7" TOUCH SCREEN WITH RECIPE MEMORY
- USB SOCKET FOR DATA DOWNLOAD
- AISI 304 STAINLESS STEEL
- ROUNDED EDGES
- EASILY ACCESSIBLE MAINTENANCE COMPARTMENT
- EVAPORATOR WITH CATAPHORESIS TREATMENT
- ADJUSTABLE FEET
- BOTTOM DRAIN WITH STANDARD COLLECTION TRAY
- RIGHT HINGE AS STANDARD (LEFT HINGE ON REQUEST)
- REFRIGERANT GAS R452A (ON REQUEST R448A, R449A)
- BIVALENT TRAY SUPPORT GN 1/1 OR EN 60X40
- DISTANCE BETWEEN RACK RAILS 65 mm

EVOX

## ACCESSORIES

**ACC 509**
Heated core probe

**ACC 510**
Multipoint core probe

**ACC 110**
Ozone sterilizer

**ACC 141**
Kit 4 Castors

**ACC 135**
Door Opening Left

**ACC 148**
Led Light

Special voltages on request

**ACC 125**
WI-FI connection kit

**ACC 126**
Connection to the Sinofcold Cloud, valid for 3 years

## ROOM CONDITIONS

| | |
|---|---|
| +32°C | 60% UR |

## SPECIFICATIONS IN COMPLIANCE WITH prEN 17032

| Blast Chilling (+65°C / +10°C) | | Deep Freezing (+65°C / -18°C) | |
|---|---|---|---|
| Max. Capacity | Time | Max. Capacity | Time |
| 40 kg | 120 min | 25 kg | 260 min |

## CONSUMPTION (prEN 17032)

| Blast Chilling | Deep Freezing |
|---|---|
| +90°C / +3°C | +90°C / -18°C |
| 0,10 kWh/kg | 0,30 kWh/kg |

## REFRIGERANT GAS

| Type | GWP | Charge |
|---|---|---|
| R452A | 2141 | 2 kg |
| R448A | 1387 | 2 kg |
| R449A | 1397 | 2 kg |

SIN OF COLD®

# FT10.40L BLAST-CHILLER

EVOX

TECHNICAL DATA

| Model | FT10.40L | FT10.40LW | FT10.40LR | FT10.40LWR | FT10.40LSG | FT10.40L SGCO$_2$ |
|---|---|---|---|---|---|---|
| Version | AIR | WATER | REMOTE | WATER REMOTE | WITHOUT GROUP | WITHOUT GROUP ($CO_2$) |
| Capacity | 1 TRAY RACK STRUCTURE 10 or 14 GN 1/1 | 1 TRAY RACK STRUCTURE 10 or 14 GN 1/1 | 1 TRAY RACK STRUCTURE 10 or 14 GN 1/1 | 1 TRAY RACK STRUCTURE 10 or 14 GN 1/1 | 1 TRAY RACK STRUCTURE 10 or 14 GN 1/1 | 1 TRAY RACK STRUCTURE 10 or 14 GN 1/1 |
| Blast Chilling | 40 kg +90°C → +3°C 90 min | 40 kg +90°C → +3°C 90 min | 40 kg +90°C → +3°C 90 min | 40 kg +90°C → +3°C 90 min | 40 kg +90°C → +3°C 90 min | 40 kg +90°C → +3°C 90 min |
| Deep Freezing | 25 kg +90°C → -18°C 240 min | 25 kg +90°C → -18°C 240 min | 25 kg +90°C → -18°C 240 min | 25 kg +90°C → -18°C 240 min | 25 kg +90°C → -18°C 240 min | 25 kg +90°C → -18°C 240 min |
| Standard tension | 400 V / 3 Ph+N 50 Hz | 400 V / 3 Ph+N 50 Hz | 400 V / 3 Ph+N 50 Hz | 400 V / 3 Ph+N 50 Hz | 400 V / 3 Ph+N 50 Hz | 230 V / 1 Ph 50 Hz |
| Power consumption | 2,0 kW / 6,5 A | 2,0 kW / 6,5 A | 2,0 kW / 6,5 A | 2,0 kW / 6,5 A | 1,0 kW / 4,0 A | 1,0 kW / 4,0 A |
| HP | 2,0 HP | 2,0 HP | 2,0 HP | 2,0 HP | • | • |
| Noise | <70 dB | <70 dB | <70 dB | <70 dB | <70 dB | <70 dB |
| Refrigeration power -10°C | 3.900 W Evap. -10°C Cond. +45°C | 3.900 W Evap. -10°C Cond. +45°C | 3.900 W Evap. -10°C Cond. +45°C | 3.900 W Evap. -10°C Cond. +45°C | • | • |
| Refrigeration power -30°C | 1.400 W Evap. -30°C Cond. +45°C | 1.400 W Evap. -30°C Cond. +45°C | 1.400 W Evap. -30°C Cond. +45°C | 1.400 W Evap. -30°C Cond. +45°C | • | • |
| Dimensions | 798 x 853 x 1860/1900 mm | 798 x 853 x 1860/1900 mm | 798 x 853 x 1860/1900 mm | 798 x 853 x 1860/1900 mm | 798 x 853 x 1860/1900 mm | 798 x 853 x 1860/1900 mm |
| Net Weight | 195 kg | 195 kg | 195 kg | 195 kg | 140 kg | 140 kg |
| Set-up | PURE KLIMA EXPERIENCE | PURE KLIMA EXPERIENCE | PURE KLIMA EXPERIENCE | PURE KLIMA EXPERIENCE | PURE KLIMA EXPERIENCE | PURE |

SIN OF COLD®

# FT10.40L BLAST-CHILLER

EVOX

| SET-UP | | | |
|---|---|---|---|
| **PURE** -40°C +10°C | **KLIMA** -40°C +65°C | **EXPERIENCE** -40°C +85°C | |
| ● | ● | ● | Blast chilling positive (+3°C) |
| ● | ● | ● | Freezing (-18°C) |
| ○ | ● | ● | Warmth's holding (+65°C) |
| ● | ● | ● | Positive holding (+3°C) |
| ● | ● | ● | Negative warmth's holding (-18°C) |
| ● | ● | ● | Defrosting |
| ○ | ● | ● | Retarder proving |
| ○ | ● | ● | Crystallization chocolate |
| ○ | ● | ● | Drying |
| ○ | ● | ● | Yogurt |
| ○ | ○ | ● | Pasteurization |
| ○ | ● | ● | Low temp. cooking with steam (+65°C) |
| ○ | ○ | ● | Low temperature cooking (+85°C) |
| ○ | ○ | ● | Steam chamber sanitization |
| ○ | ○ | ● | Cook and chill |
| ● | ● | ● | Fish sanitization |

## DIMENSIONS

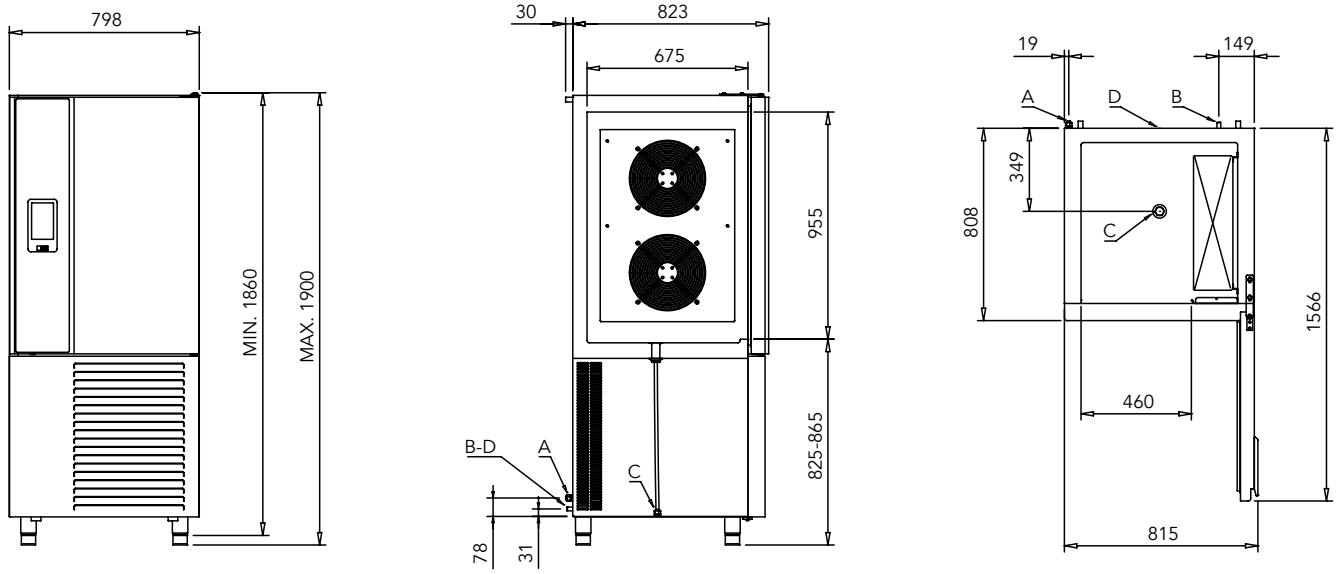


## CONNECTIONS

A Electrical connection

B Water connection (on request)

C Drain

D Refrigeration Connection (on request)